CN55GR - CobraNeck™ 55-ton Gentle Riser™ Deck
Code 658-002

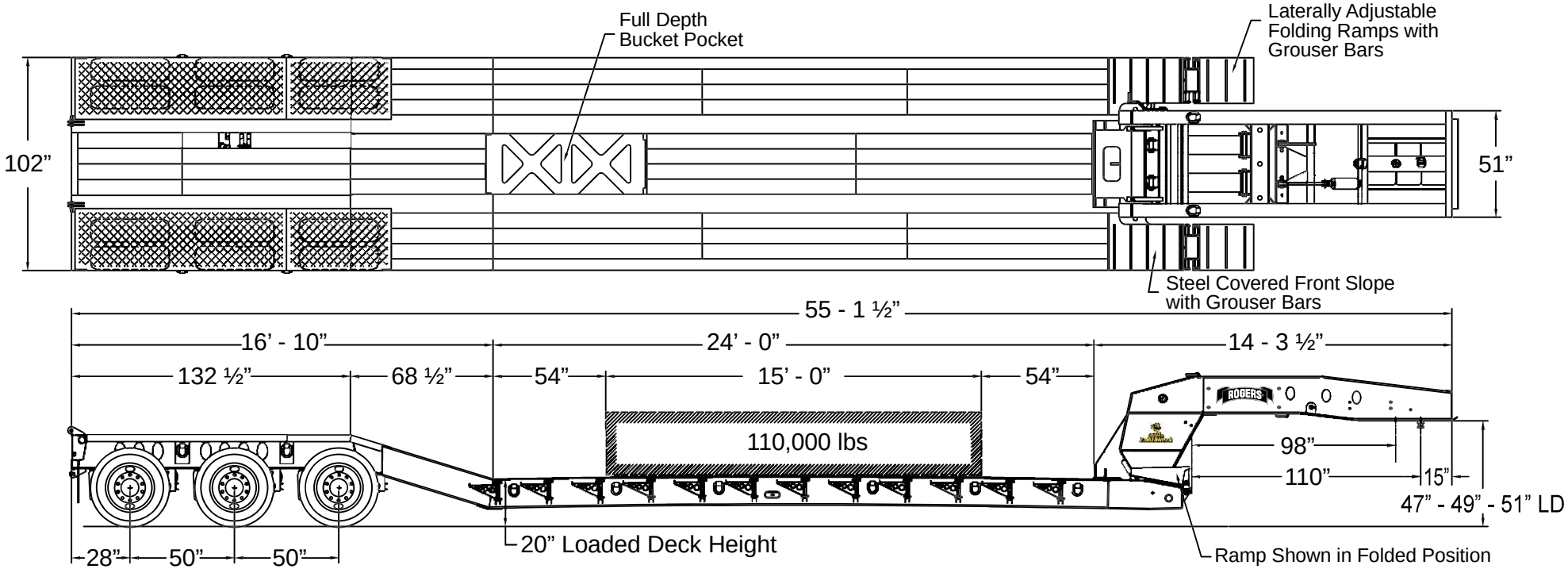

ROGERS BROTHERS CORPORATION
100 Orchard Street
Albion, PA 16401 USA
www.rogerstrailers.com

Toll Free: 800-441-9880
Phone: 814-756-4121
FAX: 814-756-4830

Copyright © 2017 Rogers Brothers Corporation

NOTES: ALL ILLUSTRATIONS, WEIGHTS, AND SPECIFICATIONS ARE APPROXIMATE. THESE MAY VARY WITH MODEL CHANGES AND ARE SUBJECT TO ENGINEERING REVISION AS REQUIRED.