# TAG21XL Tag-Along Trailer
# Code 408-003

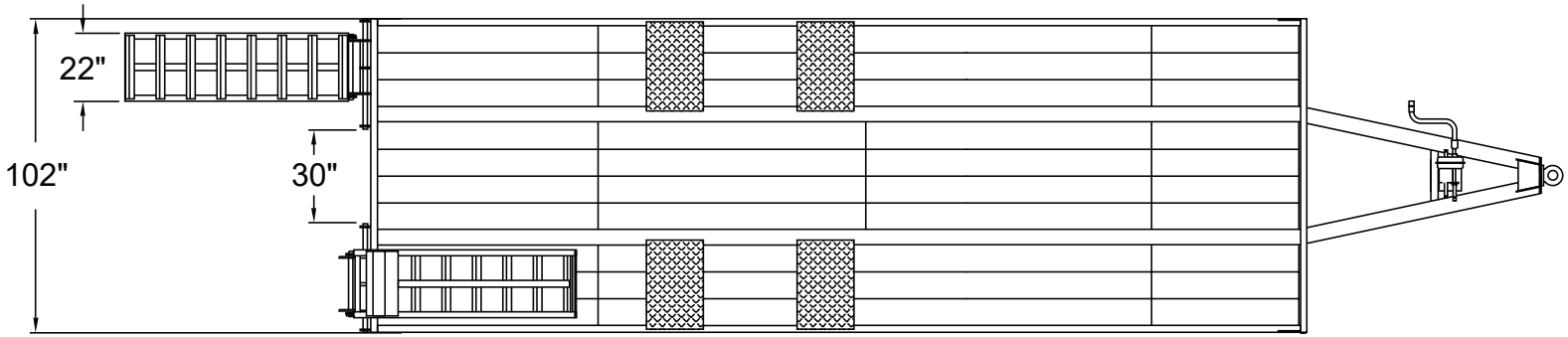


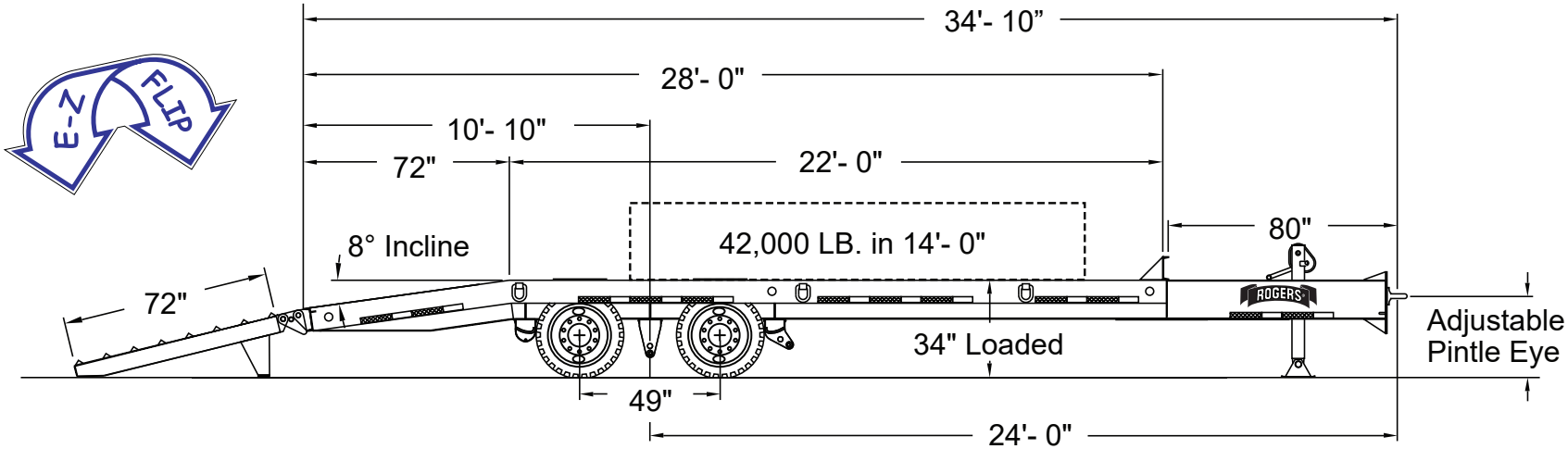



**ROGERS BROTHERS CORPORATION**
100 Orchard Street
Albion, PA 16401 USA
www.rogerstrailers.com

Toll Free: 800-441-9880
Phone: 814-756-4121
FAX: 814-756-4830



Copyright © 2018 Rogers Brothers Corporation


NOTES: ALL ILLUSTRATIONS, WEIGHTS, AND SPECIFICATIONS ARE APPROXIMATE. THESE MAY VARY WITH MODEL CHANGES AND ARE SUBJECT TO ENGINEERING REVISION AS REQUIRED.