TAG20XXL Tag-Along Trailer
Code 409-002

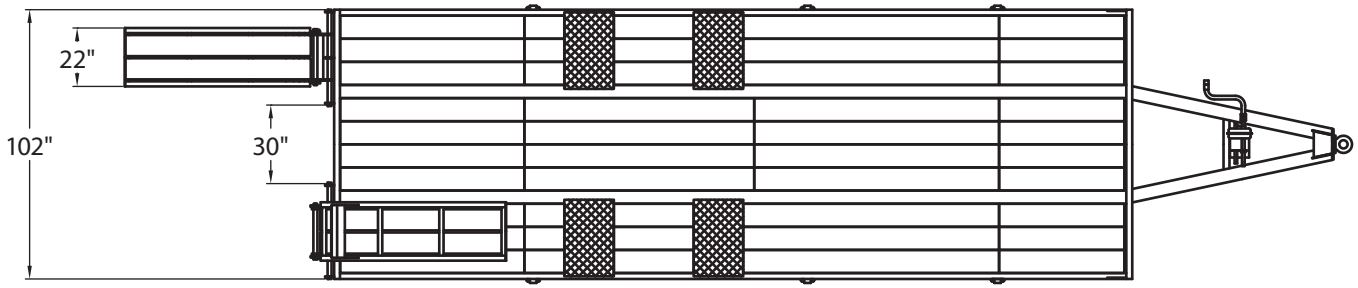

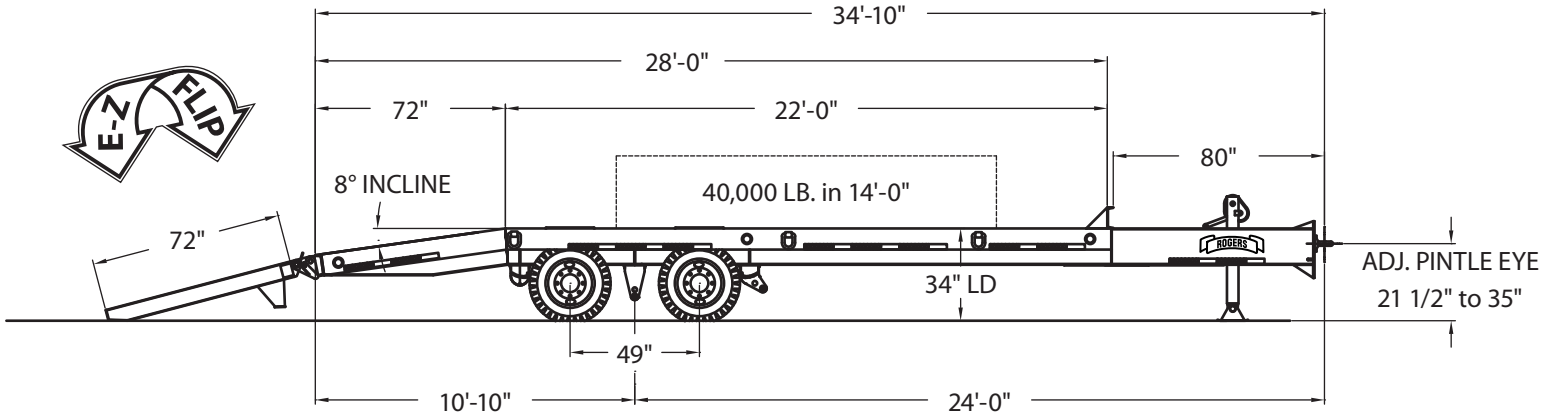

ROGERS BROTHERS CORPORATION
100 Orchard Street
Albion, PA 16401 USA
www.rogerstrailers.com
Toll Free: 1-800-441-9880
Phone: 814-756-4121
Fax: 814-756-4830

Copyright © 2011 Rogers Brothers Corporation

NOTES: DIMENSIONS ARE IN FEET-INCHES. ALL WEIGHT DISTRIBUTIONS ARE ESTIMATED. ALL ILLUSTRATIONS, WEIGHTS, AND SPECIFICATIONS ARE APPROXIMATE. THESE MAY VARY WITH MODEL CHANGES. SUBJECT TO ENGINEERING REVISION AS REQUIRED.